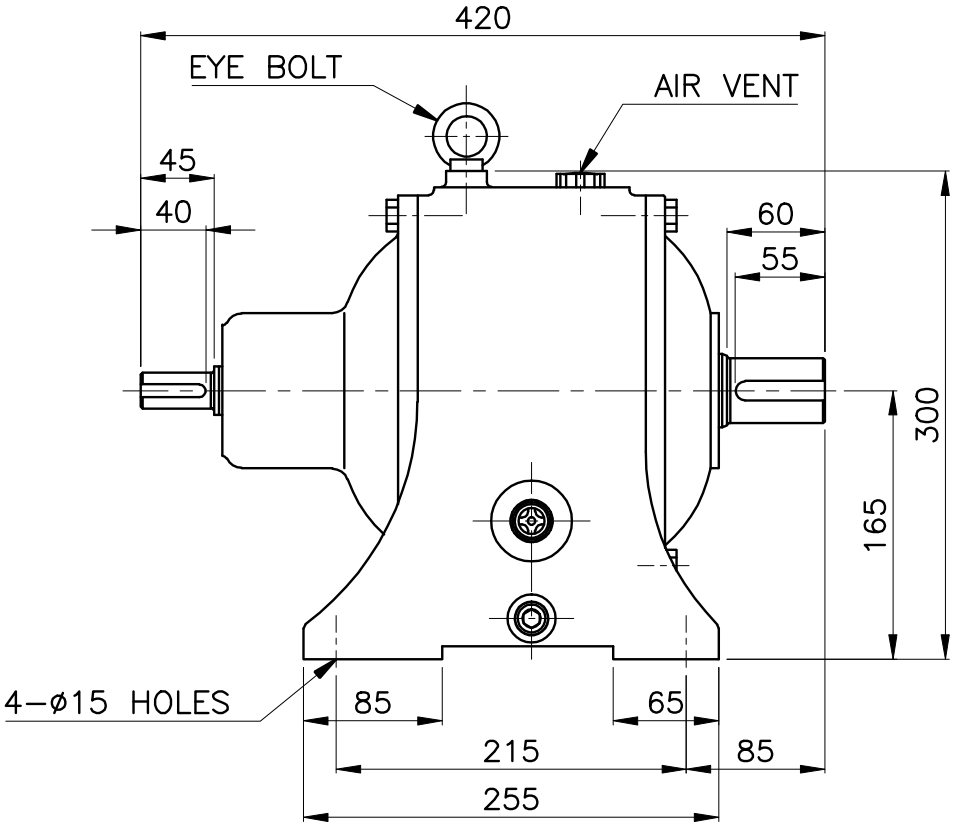

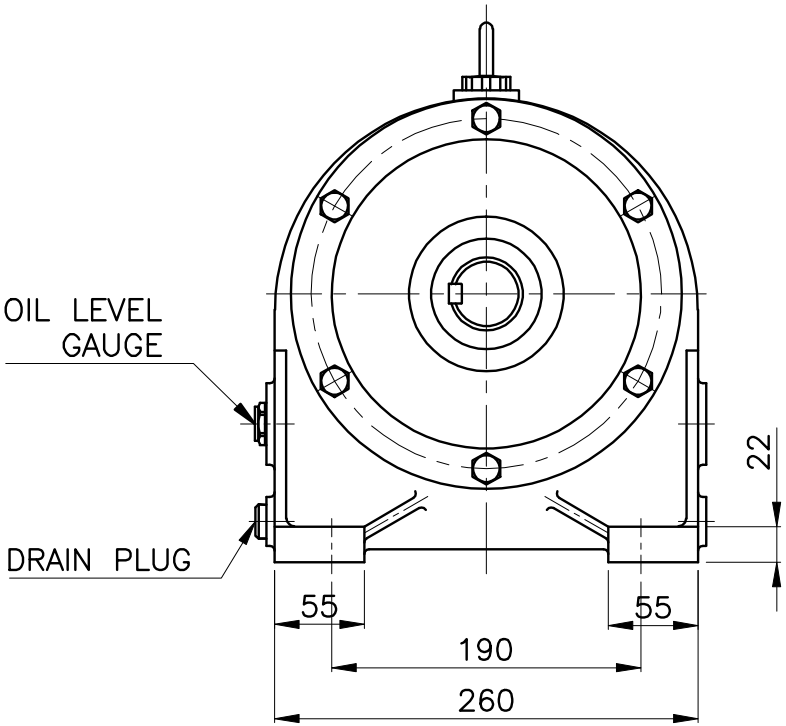

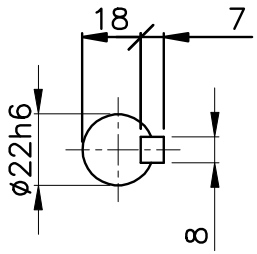

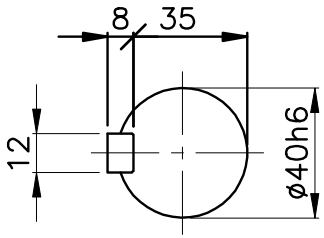

Ø22h6 0 −0.013	TOLERANCES UNLESS OTHERWISE SPECIFIED		ROUGHNESS		-	EXTERNAL FORM		-	-	
Ø40h6 0 −0.016	DIMENSION mm	TOL mm	SYMBOLS	Rmax 0.001 mm	NO.	DESCRIPITIONS	SIZE	MAT'L	Q'TY	WEIGHT (kg) / REMARKS
	1 OVER 4 UNDER	±0.1			CUSTO-MER	–	DRAWN	DESIGNED	CHECKED	APPROVED
	4" 16"	±0.2					K.E.J		J.R.H	
	16" 63"	±0.3	▽▽▽▽	0.8S	PART NAME	1.5KW 4P 1/21~1/30 JK-LT 2080 REDUCER	DATE	2007.10.10		
	63" 125"	±0.4					DWG.NO.	2H4P30-L2080		
	125" 250"	±0.5	▽▽▽	6.3S						
	250" 500"	±0.6								
	500" 1000"	±0.8	▽▽	12.5S	SCALE	1 / 1	PROJEC-TION	REL.NO.		
	1000" 2000"	±1.0								
	2000" 4000"	±1.5	▽	50S	JEIL ENGINEERING & INDUSTRIAL CO., LTD.					
	ANGLE	±0.5								